# FOURTH AMENDMENT TO LICENSE AGREEMENT

THIS FOURTH AMENDMENT TO LICENSE AGREEMENT (Fourth Amendment) is made and entered into by and between the City of Sugar Land, Texas, a municipal corporation (City) and T-Mobile West LLC, a Delaware limited liability company, f/k/a T-Mobile West Corporation, a Delaware corporation, successor in interest to T-Mobile Texas, L.P., a wholly- owned subsidiary of T-Mobile, USA, Inc. (T-Mobile).

## Recitals

A. The City and T-Mobile (or as applicable, their respective predecessors in interest) entered into a License Agreement dated March 22, 2006 (Original License) with respect to the Licensed Premises located at 13944 Oakwood Lane, Sugar Land, F011 Bend County, Texas 77478.

B. On December 4, 2012, the City and T-Mobile entered into the First Amendment to License Agreement for purposes of (i) revising the definition of Antenna Facility to allow different equipment on the Water Tank and Licensed Premises and (i) authorizing assignment of the License from T-Mobile Texas, L.P., a wholly-owned subsidiary of T-Mobile, USA, Inc., to T-Mobile West, LLC, a Delaware limited liability company f/k/a T-Mobile West Corporation, a Delaware corporation (First Amendment).

C. On December 23, 2016, the City and T-Mobile entered into the Second Amendment to License Agreement for purposes of (i) revising the definition of Antenna Facility to allow different equipment on the Water Tank and Licensed Premises; and (ii) adding a provision regarding interference with the City's three tier wireless system; (iii) adding a provision that the City grants no property interest in or to the Water Tank or Licensed Premises; and (iv) increasing the annual license fee for use of the Licensed Premises (Second Amendment).

D. On October 17, 2017, the City and T-Mobile entered into the Third Amendment to License Agreement for the purposes of revising the definition of Antenna Facility and another provision of the Original License to allow different equipment to be installed on the Water Tank and on the ground below (Third Amendment).

E. The City and T-Mobile desire to enter into this Fourth Amendment to revise the definition of Antenna Facility to provide for installation of a new generator and transfer switches and removal of two existing cabinets on the ground below the Water Tank on the Licensed Premises.

F. Collectively, the Original License, First Amendment, Second Amendment, Third Amendment and this Fourth Amendment are the "License".

## Agreement

NOW, THEREFORE, in consideration of the mutual covenants and agreements herein contained and other good and valuable consideration, the receipt and sufficiency of which is acknowledged, the City and T-Mobile agree as follows:

1. That the definition of *Antenna Facility* in Section A of the License is amended to read as follows:

   *Antenna Facility* means a communications facility consisting of antennae and associated cabling and equipment as more particularly described in Exhibit A to the Third Amendment, modified as shown in the attached Exhibit D, which is incorporated into this License. Exhibit A to the Third Amendment replaces Exhibit A attached to the Original License, Exhibit C to the First Amendment, and Exhibit A to the Second Amendment.

2. Except as specifically set forth herein, this Fourth Amendment does not modify, alter, or amend the remaining terms of the License, as amended by the First Amendment, Second Amendment, and Third Amendment, all of which remain in full force and effect.

IN WITNESS WHEREOF, the parties have executed this Fourth Amendment effective on the later date of the parties' signatures.

City of Sugar Land, Texas,
a municipal corporation

_____

Name: Allen Bogard
Title: City Manager

Date: _____

T-Mobile West LLC,
a Delaware limited liability company

Name: Keith A. Haydon
Title: Director, Network Eng & Ops

Date: 7/3/2018

# EXHIBIT D

## Construction Drawings for Generator

T-Mobile

# GENERATOR ADD PROJECT 2018

SITE NAME: SUGAR LAND/MASON WT
SITE NUMBER: A3F0197A
STRUCTURE TYPE: WATER TANK

PREPARED FOR:

T-Mobile
Get More From Life
2 GREENWAY PLAZA SUITE 1100
HOUSTON, TX 77046

## PROJECT INFORMATION

SITE NAME: SUGAR LAND/MASON WT
SITE NUMBER: A3F0197A
911 ADDRESS: 13948 OAKWOOD LANE
SUGAR LAND, TX 77478
LATITUDE: 29.64444400°
LONGITUDE: -95.63166700°
GROUND ELEVATION: 83' AMSL
JURISDICTION: CITY OF SUGAR LAND
STRUCTURE TYPE: WATER TANK

## DRIVING DIRECTIONS

FROM T-MOBILE SWITCH, 4660 N. SAM HOUSTON PARKWAY E., SUITE 190 HOUSTON TEXAS 77032,

GET ON HWY 59 S/I-69 FROM TEXAS 8 BELTWAY FRONTAGE RD AND 4TH ST/EASTEX FREEWAY SERVICE RD. CONTINUE ON HWY 59 S/I-69. TAKE STATE HWY 288 S/TX-288 S AND US-90 ALT W TO ELDRIDGE RD IN SUGAR LAND. CONTINUE ON ELDRIDGE RD. DRIVE TO OAKWOOD LN. SITE WILL BE ON THE RIGHT

## VICINITY MAP

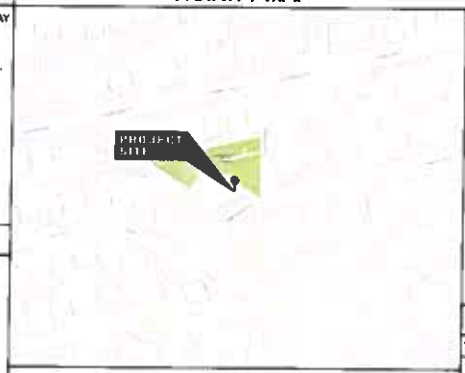


## APPROVALS

PROPERTY OWNER OR REP. DATE
LAND USE PLANNER DATE
OPERATIONS DATE
RF ENGINEER DATE
ZONING AND REAL ESTATE DATE
CONSTRUCTION MANAGER DATE

SITE NAME:
SUGAR LAND/MASON WT
SITE NUMBER:
A3F0197A
SITE ADDRESS:
13948 OAKWOOD LANE
SUGAR LAND, TX 77478
FORT BEND COUNTY

## SCOPE OF WORK

THE WIRELESS COMMUNICATIONS FACILITY IS NOT INTENDED FOR HUMAN OCCUPANCY

1. INSTALLATION OF NEW GENERAC SD015 GENERATOR
2. INSTALLATION OF NEW 200A AUTOMATIC TRANSFER SWITCH (ATS)
3. REMOVAL OF (2) EXISTING ULTRASITE CABINETS

## CONTACTS

**APPLICANT:**
T-MOBILE USA INC.
2 GREENWAY PLAZA SUITE 1100
HOUSTON, TX 77046
CONTACT: ANTHONY RANDIO
PHONE: 713-407-3494

**PROPERTY OWNER:**
CITY OF SUGAR LAND

**ARCHITECT/ENGINEER:**
LEVEL 5 CONSULTING ENGINEERS
19315 FM 2252, SUITE 301
GARDEN RIDGE, TX 78266
CONTACT: TONY HUEBEL
PHONE: 210-542-5911

**TELEPHONE COMPANY:**

**POWER COMPANY:**

## COUNTY MAP

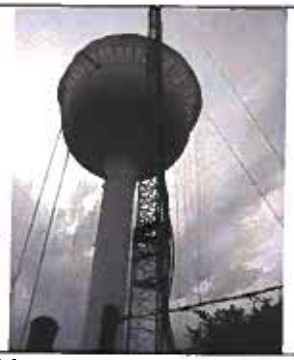

## SITE ACCESS PROCEDURES

## SHEET INDEX


| | |
|---|---|
| SITE GENERAL ARRANGEMENT PLANS | |
| T1.0 | TITLE SHEET |
| A1.0 | COMPOUND PLAN |
| A1.1 | ENLARGED EQUIPMENT PLAN & DETAILS |
| E1.0 | ELECTRICAL AND GROUNDING PLAN |
| E1.1 | ELECTRICAL ONE-LINE DIAGRAM AND DETAILS |
| | GENERAC GENERATOR DETAILS FOR REFERENCE (SHEET 1) |


NOTE: DRAWING SCALES ARE FOR 11"X17" & 22"X34" SHEETS UNLESS OTHERWISE NOTED.

## APPLICABLE CODES & STANDARDS

- INTERNATIONAL BUILDING CODE, 2015 EDITION AS ADOPTED BY LOCAL JURISDICTION.
- NATIONAL ELECTRICAL CODE, 2017 EDITION AS ADOPTED BY LOCAL JURISDICTION.
- INTERNATIONAL MECHANICAL CODE, 2015 EDITION AS ADOPTED BY LOCAL JURISDICTION.
- INTERNATIONAL ENERGY CONSERVATION CODE, 2015 EDITION AS ADOPTED BY LOCAL JURISDICTION

Texas 811
Know what's below.
Call before you dig.

LEVEL 5 CONSULTING ENGINEERS, INC.
19315 FM 2252, STE. 301
GARDEN RIDGE, TX 78266
PH: (210) 542-5911
F-13646

| | |
|---|---|
| DRAWN BY: | LC |
| APPROVED BY: | TH |
| DATE DRAWN: | 05/14/18 |

REVISION

| NO | DESCRIPTION | BY | DATE |
|---|---|---|---|
| PC00 | ISSUED FOR REVIEW | LC | 05/14/18 |

SHEET TITLE:
TITLE SHEET

SHEET NUMBER:
T1.0

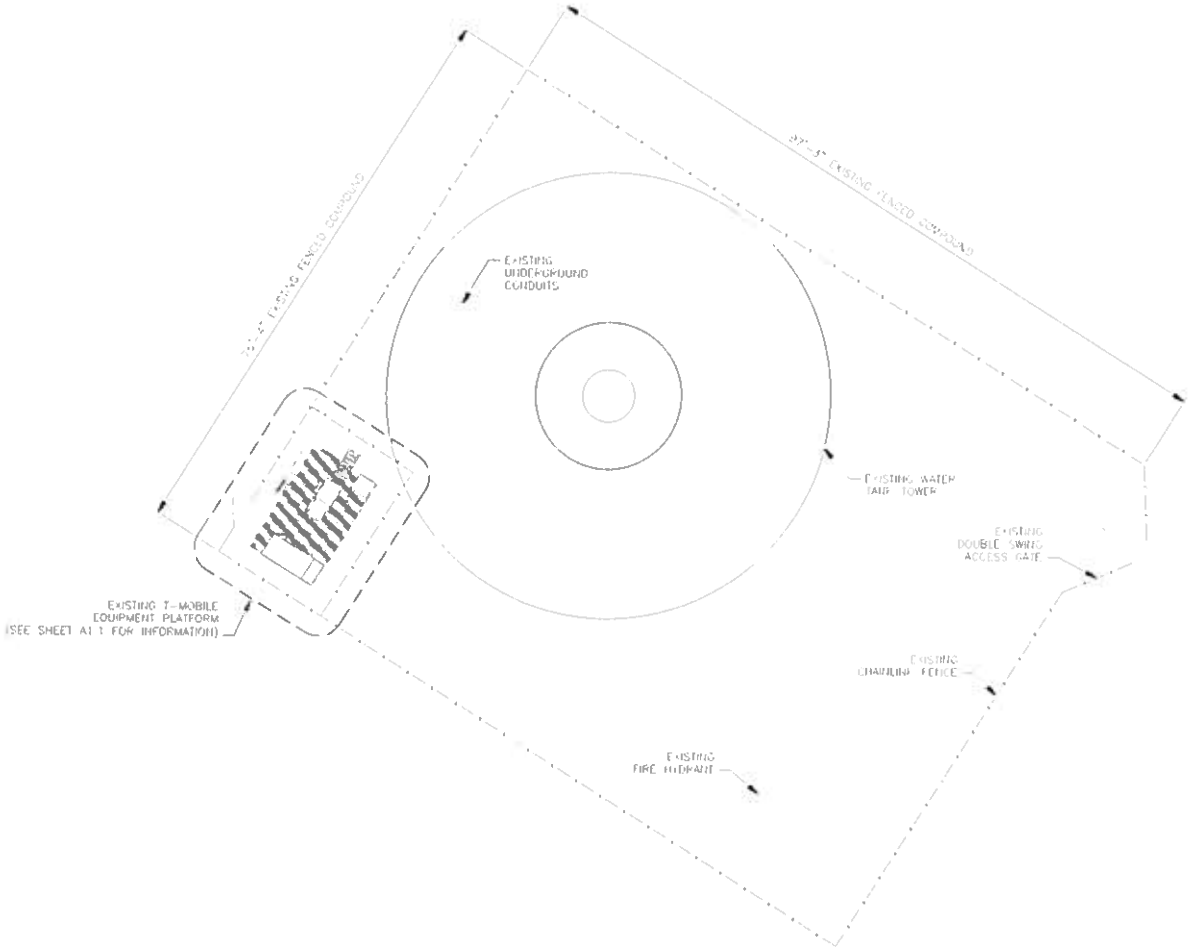


## 1 COMPOUND PLAN

TRUE NORTH

FULL SIZE PLOT SCALE: 1/8" = 1'-0"
HALF SIZE PLOT SCALE: 1/16" = 1'-0"

0 4 8 16'

PREPARED FOR:

T-Mobile
Get More From Life
2 GREENWAY PLAZA SUITE 1100
HOUSTON, TX 77046

SITE NAME

**SUGAR LAND/MASON WT**

SITE NUMBER:

**A3F0197A**

SITE ADDRESS:
13948 OAK [illegible] LANE
SUGAR LAND, TX 77478
FORT BEND COUNTY

STAMP:

LEVEL 5 CONSULTING ENGINEERS, INC.
19315 FM 2252, STE. 301
GARDEN RIDGE, TX 78266
PH: (210) 542-5911
F-13646

| | |
|---|---|
| DRAWN BY: | LC |
| APPROVED BY: | JH |
| DATE DRAWN: | 05/14/15 |

REVISION

| NO. | DESCRIPTION | BY | DATE |
|---|---|---|---|
| PCD0 | ISSUED FOR REVIEW | LC | 05/14/15 |

SHEET TITLE

**COMPOUND PLAN**

SHEET NUMBER

**A1.0**

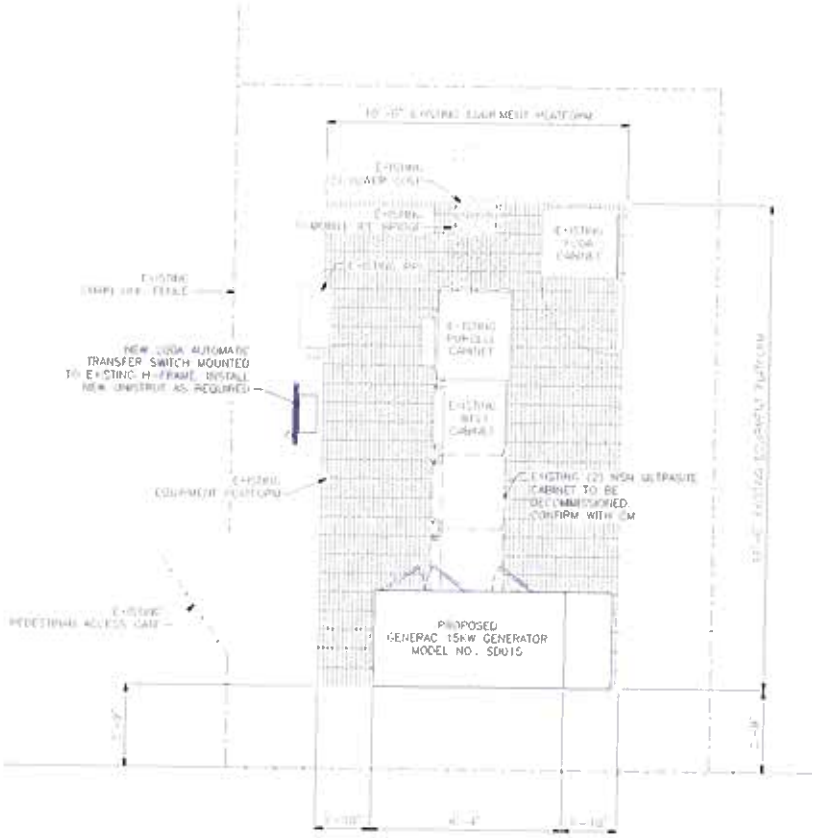


1 **ENLARGED EQUIPMENT PLAN**

FULL SIZE PLOT SCALE 1" = 1'-0"
HALF SIZE PLOT SCALE 1/2" = 1'-0"

TRUE NORTH

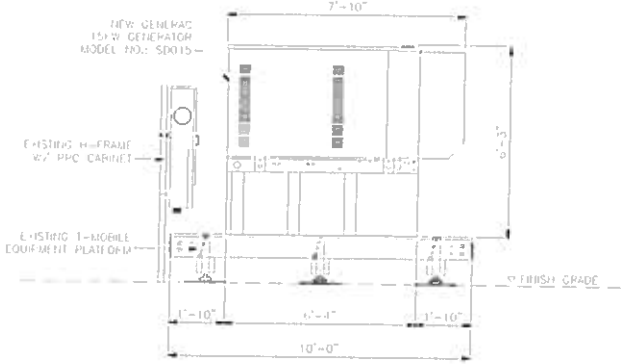


1 **GENERATOR ELEVATION**

SCALE: NTS

PREPARED FOR

T-Mobile
Get More From Life
2 GREENWAY PLAZA SUITE 1100
HOUSTON, TX 77046

SITE NAME:

**SUGAR LAND/MASON WT**

SITE NUMBER:

**A3F0197A**

SITE ADDRESS:
13948 OAKWOOD LANE
SUGAR LAND, TX 77478
FORT BEND COUNTY

STAMP

LEVEL 5 CONSULTING ENGINEERS, INC.
19315 FM 2252, STE. 301
GARDEN RIDGE, TX 78266
PH: (210) 542-5911
F-13646

| | |
|---|---|
| DRAWN BY: | LC |
| APPROVED BY: | TH |
| DATE DRAWN: | 05/14/18 |

REVISION

| NO | DESCRIPTION | BY | DATE |
|---|---|---|---|
| 00 | ISSUED FOR REVIEW | LC | 05/14/18 |

SHEET TITLE

**ENLARGED EQUIPMENT PLAN & DETAILS**

SHEET NUMBER

**A1.1**

KEYED NOTES:

1. EXISTING T-MOBILE POWER METER
2. EXISTING T-MOBILE PPC CABINET
3. PROPOSED T-MOBILE AUTOMATIC TRANSFER SWITCH ATTACHED TO EXISTING H-FRAME. MODIFY EXISTING FRAME AS REQUIRED
4. PROPOSED 2" POWER CONDUIT FROM EXISTING METER/DISCONNECT TO PROPOSED ATS. INTERSECT EXISTING INCOMING POWER AS REQUIRED (APPROX. =±100')
5. PROPOSED 2" POWER CONDUIT FROM PROPOSED ATS TO EXISTING PPC CABINET
6. PROPOSED 2" POWER CONDUIT FROM PROPOSED ATS TO PROPOSED GENERATOR (APPROX. =±15')
7. PROPOSED 1" REMOTE START WITH RELAY CONDUIT FROM PROPOSED ATS TO PROPOSED GENERATOR (APPROX. =±15')
8. PROPOSED 1" ALARM CONDUIT WITH CAT5 CABLE FROM EXISTING TELCO BOARD TO PROPOSED GENERATOR (APPROX. =±10')
9. PROPOSED 1" HEATER BLOCK AND BATTERY CHARGER CONDUIT FROM EXISTING PPC CABINET TO PROPOSED GENERATOR (APPROX. =±10')
10. PROPOSED #2 AWG GROUND LEAD TO EXISTING EQUIPMENT GROUND RING (FIELD VERIFY LOCATION)

GENERAL NOTES:

1. CONDUIT LENGTHS AND ROUTES INDICATED ARE FOR GENERAL REFERENCE ONLY AND SHOULD BE FIELD VERIFIED

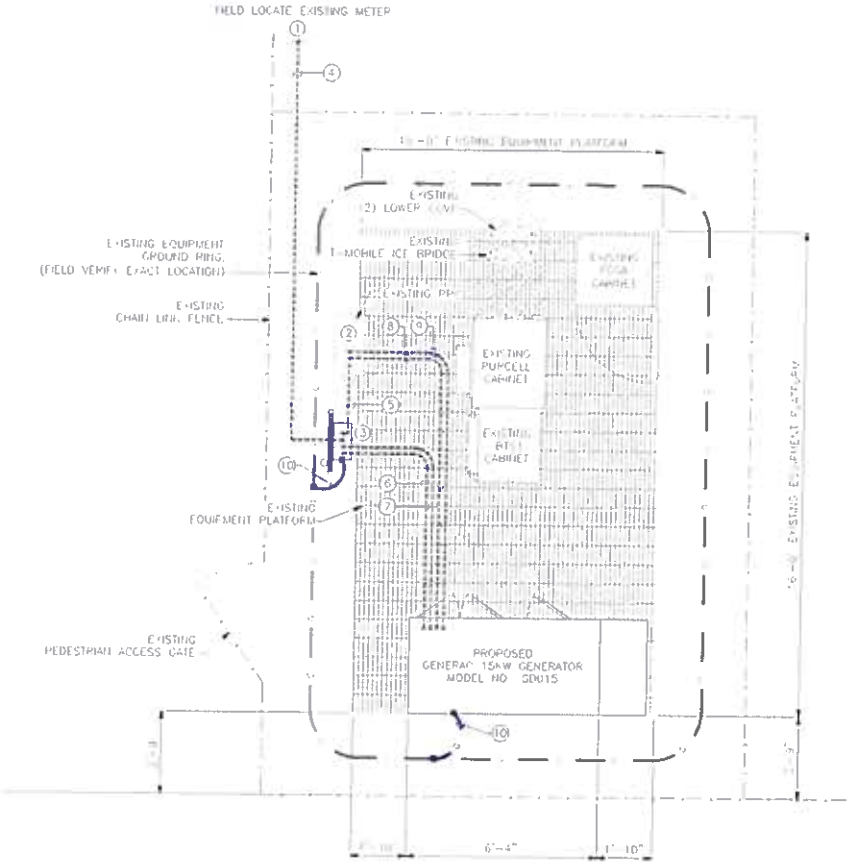


## 1 ENLARGED EQUIPMENT PLAN

TRUE NORTH

FULL SIZE PLOT SCALE: 1" = 1'-0"
HALF SIZE PLOT SCALE: 1/2" = 1'-0"

PREPARED FOR

T-Mobile
Get More From Life
2 GREENWAY PLAZA SUITE 1100
HOUSTON, TX 77046

SITE NAME:

**SUGAR LAND/MASON WT**

SITE NUMBER:

**A3F0197A**

SITE ADDRESS:
13948 OAKWOOD LANE
SUGAR LAND, TX 77478
FORT BEND COUNTY

STAMP

LEVEL 5 CONSULTING ENGINEERS, INC.
19315 FM 2252, STE. 301
GARDEN RIDGE, TX 78266
PH: (210) 542-5911
F-13646

| | |
|---|---|
| DRAWN BY: | LC |
| APPROVED BY: | TH |
| DATE DRAWN | 05/14/19 |

REVISION

| NO | DESCRIPTION | BY | DATE |
|---|---|---|---|
| 0 | ISSUED FOR REVIEW | LC | 05/14/19 |

SHEET TITLE

**ENLARGED EQUIPMENT PLAN & DETAILS**

SHEET NUMBER

**E1.0**

## ONE-LINE DIAGRAM GENERAL NOTES:

1. ELECTRICAL CONTRACTOR SHALL VERIFY EXISTING SITE CONDITIONS PRIOR TO BEGINNING CONSTRUCTION.
2. ELECTRICAL SCOPE OF WORK IS INSTALLATION OF GENERATOR UNIT TO EXISTING ELECTRICAL SERVICE.
3. ALL CONDUITS SHALL BE THHN/THWN-2 COPPER, UNLESS OTHERWISE NOTED.
4. ALL ELECTRICAL GEAR SHALL BE UL LISTED PER ITS INTENDED USAGE AND INSTALLATION LOCATION.
5. COORDINATE OUTAGES WITH LOCAL UTILITY AT LEASE THREE (3) DAYS IN ADVANCE.
6. COORDINATE OUTAGES WITH OWNER AT LEAST THREE (3) DAYS IN ADVANCE PRIOR TO SHUTDOWN.
7. NEW ELECTRICAL GEAR SHALL BE INSTALLED A MINIMUM 18" ABOVE 0.2% 100 YEAR FLOOD PLAIN (NOTIFY PROJECT MANAGER OF ANY CONFLICTS PRIOR TO BEGINNING CONSTRUCTION AND INSTALLATION).

## ELECTRICAL LOAD ANALYSIS SUMMARY:

NO INCREASE IN ELECTRICAL SERVICE OR GEAR IS REQUIRED AS A RESULT IN GENERATOR INSTALLATION

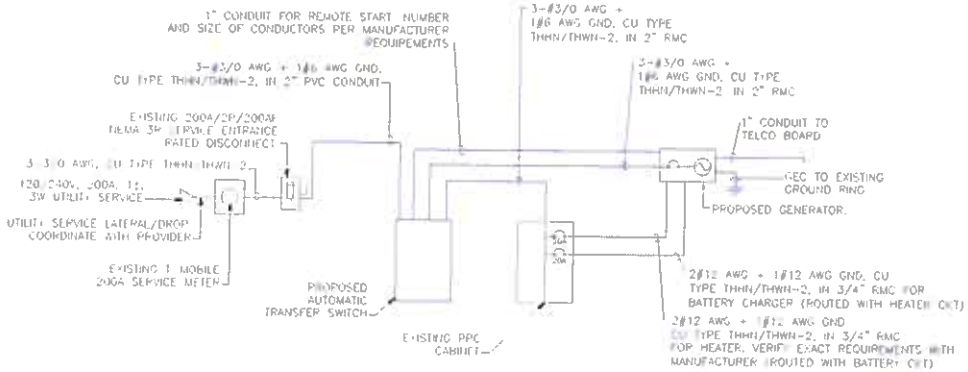


**1 ELECTRICAL ONE-LINE DIAGRAM**
SCALE: N.T.S.

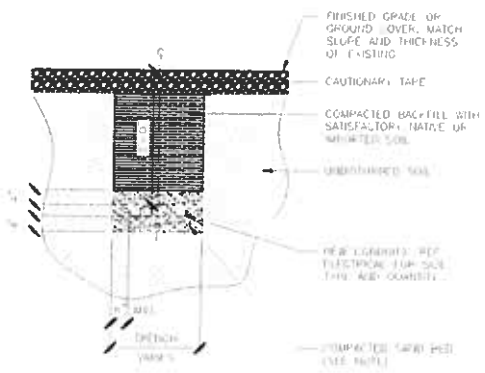


**2 TYPICAL UTILITY TRENCH DETAIL**
SCALE: N.T.S.

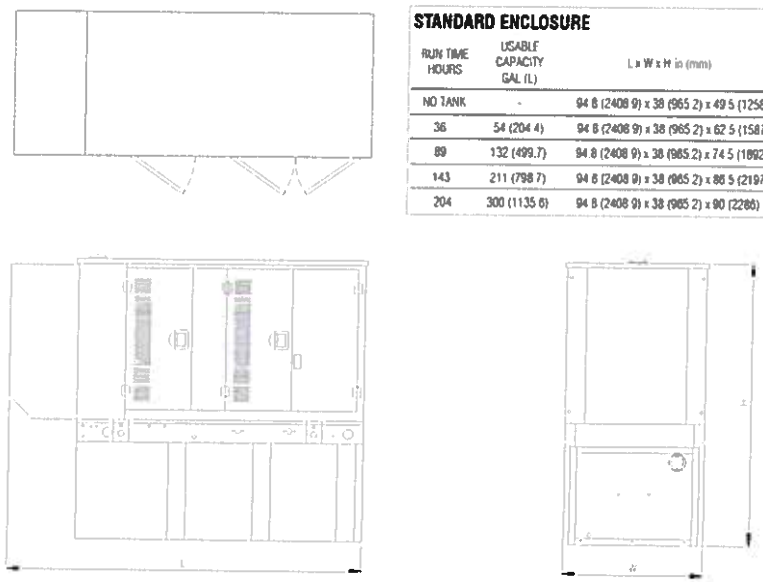

**STANDARD ENCLOSURE**

| RUN TIME HOURS | USABLE CAPACITY GAL (L) | L x W x H in (mm) | WT lbs (kg) - Enclosure Only: Steel | WT lbs (kg) - Enclosure Only: Aluminum |
|---|---|---|---|---|
| NO TANK | - | 94.8 (2408.9) x 38 (965.2) x 49.5 (1258.1) | 302 (137) | 191 (87) |
| 36 | 54 (204.4) | 94.8 (2408.9) x 38 (965.2) x 62.5 (1587.5) | | |
| 89 | 132 (499.7) | 94.8 (2408.9) x 38 (965.2) x 74.5 (1892.3) | | |
| 143 | 211 (798.7) | 94.8 (2408.9) x 38 (965.2) x 86.5 (2197.1) | | |
| 204 | 300 (1135.6) | 94.8 (2408.9) x 38 (965.2) x 90 (2286) | | |

**3 GENERAC SD015 DETAIL**
SCALE: N.T.S.

PREPARED FOR

T-Mobile
Get More From Life
2 GREENWAY PLAZA SUITE 1100
HOUSTON, TX 77046

SITE NAME:
**SUGAR LAND/MASON WT**

SITE NUMBER:
**A3F0197A**

SITE ADDRESS:
13948 OAKBOOD LANE
SUGAR LAND, TX 77478
FORT BEND COUNTY

STAMP:

LEVEL 5 CONSULTING ENGINEERS, INC.
19319 FM 2252, STE. 301
GARDEN RIDGE, TX 78266
PH: (210) 542-9011
F-13646

| | |
|---|---|
| DRAWN BY: | LC |
| APPROVED BY: | DH |
| DATE DRAWN: | 05/14/18 |

REVISION

| NO | DESCRIPTION | BY | DATE |
|---|---|---|---|
| 0 | ISSUED FOR REVIEW | LC | 05/14/18 |

SHEET TITLE:
**ELECTRICAL ONE-LINE DIAGRAM AND DETAILS**

SHEET NUMBER:
**E1.1**

| SH | REV | VINDICHILL VERSION |
|---|---|---|
| 1/1 | B | B.2 |

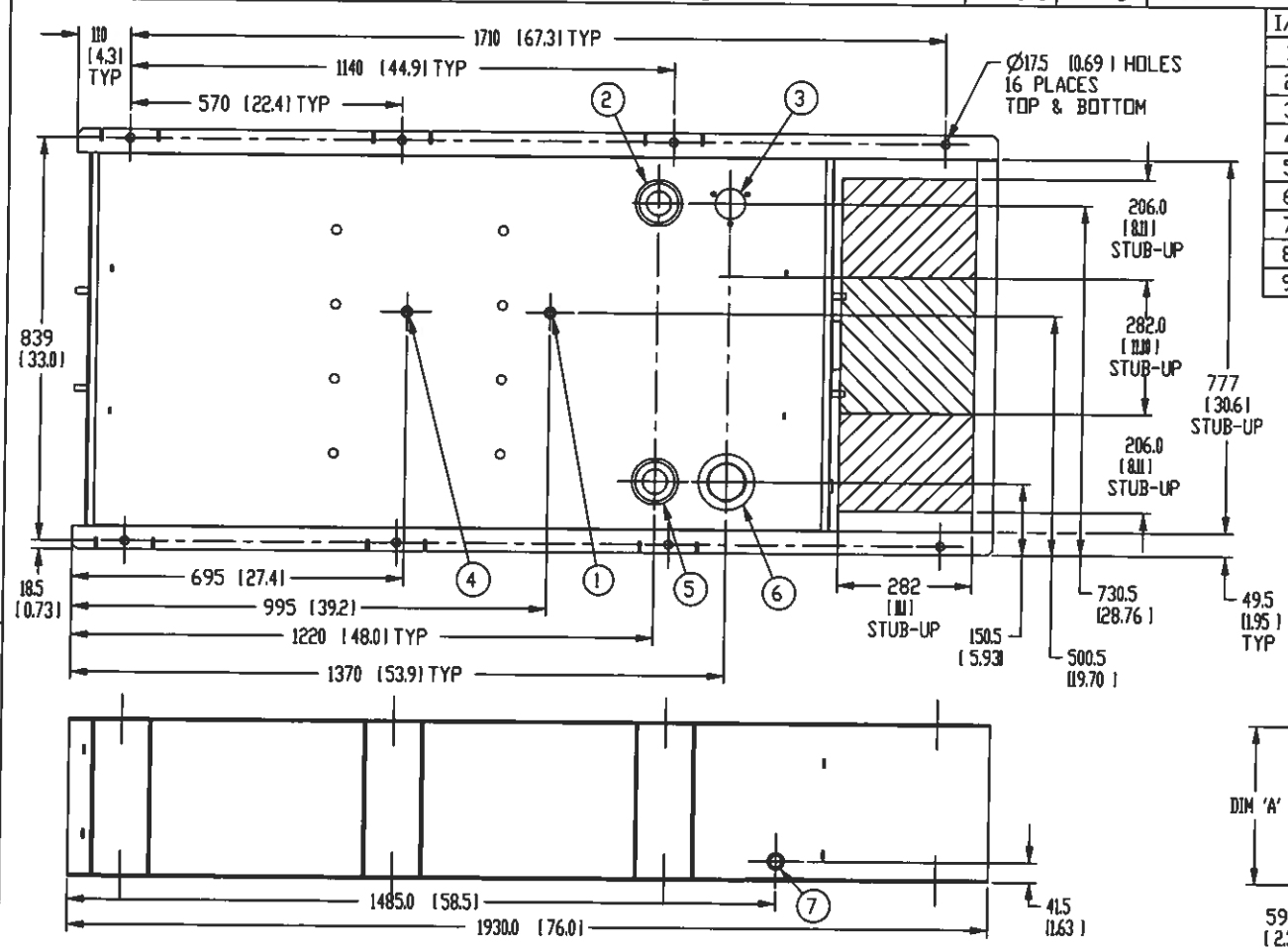


| I/N | TANK FITTING | PROVIDING FUNCTION |
|---|---|---|
| 1 | 3/8" NPT COUPLING | FUEL SUPPLY |
| 2 | 2" NPT WELD FLANGE | FUEL FILL |
| 3 | | ELEC. FUEL LEVEL |
| 4 | 3/8" NPT COUPLING | FUEL RETURN |
| 5 | 2" NPT WELD FLANGE | VENT |
| 6 | 3" NPT WELD FLANGE | EMERGENCY VENT |
| 7 | 3/4" NPT COUPLING | DRAIN |
| 8 | 1/2" NPT HALF COUPLING | LEAK DETECTOR |
| 9 | 3" NPT WELD FLANGE | OUTER TANK EMERGENCY VENT |

CAPACITY SHOWN: LITER [GALLONS]
WEIGHT SHOWN: KILOGRAMS [POUNDS]
LENGTH SHOWN: MM [INCH]

UL #142 LISTED

LOW VOLTAGE STUB-UP

HIGH VOLTAGE STUB-UP

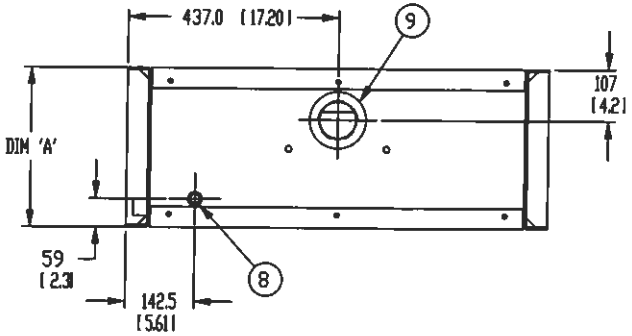


| TANK P/N | 0J18370ST03 | 0J18380ST03 | 0J18390ST03 |
|---|---|---|---|
| DIM 'A' | 330 [13] | 635 [25] | 940 [37] |
| TOTAL CAPACITY | 227 [60] | 524 [138] | 820 [217] |
| USABLE CAPACITY | 204 [54] | 501 [132] | 799 [211] |
| DRY WEIGHT | 218 [480] | 322 [710] | 417 [919] |

DRAWING CREATED FROM PRO/ENGINEER 3D FILE. ECO MODIFICATION TO BE APPLIED TO SOLID MODEL ONLY.

# INSTALLATION DRAWING

GENERAC POWER SYSTEMS OWNS THE COPYRIGHT OF THIS DRAWING WHICH IS SUPPLIED IN CONFIDENCE AND MUST NOT BE USED FOR ANY PURPOSE OTHER THAN FOR WHICH IT IS SUPPLIED WITHOUT THE EXPRESS WRITTEN CONSENT OF GENERAC POWER SYSTEMS. GENERAC POWER SYSTEMS ©2010

ELECTRONICALLY APPROVED
INSIDE VINDICHILL

GENERAC

TITLE
INSTALL A-GROUP BASETANKS

| ISSUE DATE: 02/04/11 | | | |
|---|---|---|---|
| SIZE B | CAGE NO N/A | DWG NO 0J4206 | REV B |
| SCALE 0.100 | WT-KG 220.730 | SHEET 1 of 1 | |